MCM-20VD/MCM-21VD

Features

- 1/3 inch IT CCD
- Ultra High Resolution : 600 TV Lines
- Built in DC Iris Vari-focal Lens (f=4~9mm)
- Min. Illumination : 0.05 Lux
- OSD, DNR
- Auto White Balance
- AGC, SBLC, Flickerless
- Motion Detection, Privacy Zone, Mirror Function
- 12VDC

DIMENSIONS

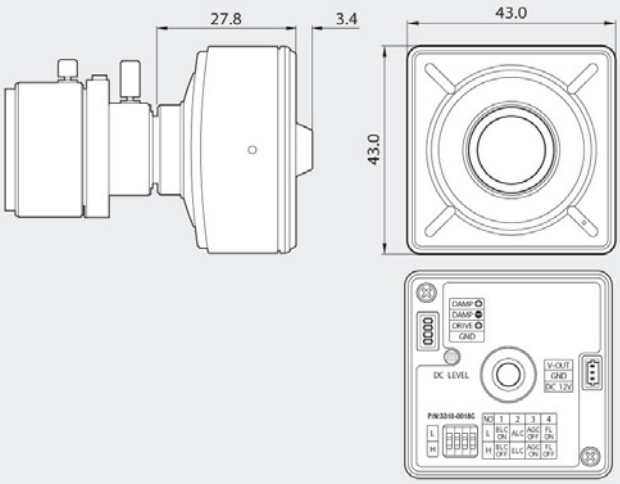

SPECIFICATIONS

Model	MCM-20VD	MCM-21VD
Signal System	NTSC	PAL
Scanning System	2:1 Interlace	
Scanning Frequency (H)	15.734 KHz	15.625 KHz
Scanning Frequency (V)	59.94 Hz	50 Hz
Image Sensor	1/3 Inch IT CCD	
Total Pixels	811(H) x 508(V) 410K	795(H) x 596(V) 470K
Total / Effective Pixels	768(H) x 494(V) 380K	752(H) x 582(V) 440K
Horizontal Resolution	600 TV Lines	
Video Output	1.0V p-p (75Ω, Composite)	
S/N Ratio	More than 50dB(AGC Off)	
Lens	DC Iris Vari-focal Lens (f=4~9mm)	
Min.Illumination	0.05 Lux (Color)	
OSD	English, Chinese	
Digital Noise Reduction	Low, Middle, High, Off	
White Balance	Auto	
AGC	On/Off	
SBLC	Off, Low, Middle, High	
Flickerless	On/Off	
Privacy Zone	On/Off (4 Programmable Zone)	
Motion Detection	On/Off (4 Programmable Zone)	
Mirror Function	Horizontal	
Shutter Speed	1/60~1/100,000 Sec.	1/50~1/120,000sec.
Supplied Voltage	DC9V~15V (Recommendation DC12V±0.5V)	
Power Consumption	Max. 3W	
Dimensions (WxH)	43.0x43.0 mm	